HYDROVANE

New Owner Manual

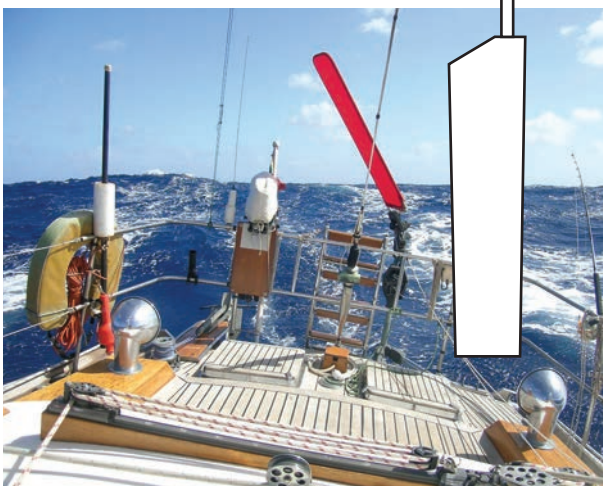

Hydrovane International Marine Inc.
2424 Haywood Avenue
West Vancouver, BC, V7V 1Y1 Canada
+ 1.604.925.2660
www.hydrovane.com

HYDROVANE
SINCE 1968

STEERING THE DREAM

STEERING THE DREAM

INSTRUCTIONS

Please watch our detailed installation and operation videos online: www.hydrovane.com/instructions

INDEX

INSTALLATION OF NEW UNIT

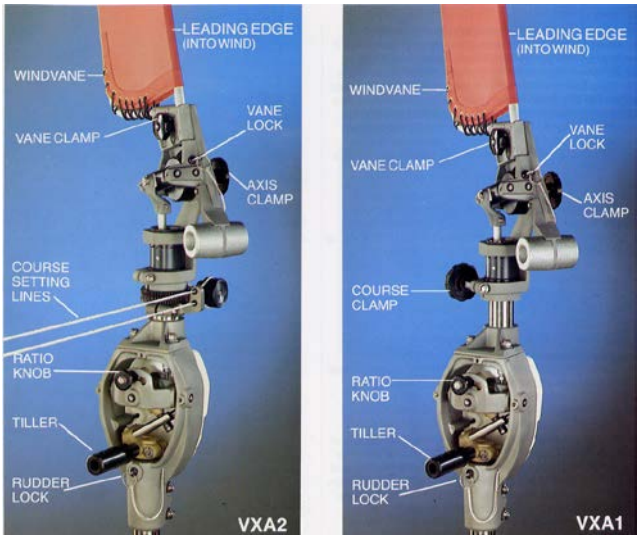

OPERATION

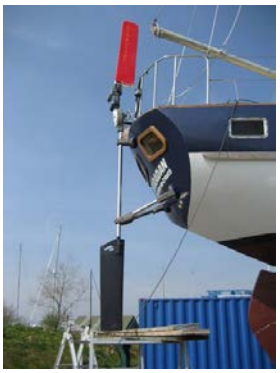

The complete Hydrovane can be 10 to 15 feet (3 to 5 metres) tall and includes:

1. Vane (red) – 56.5in/1435mm (Standard) or 44in/1118mm (Stubby)
2. Drive Unit – 25.5in/650mm
3. Shaft assembly – various lengths
4. 2 brackets attaching the shaft to the transom
5. Rudder (black) – 43 in/1092mm

Hydrovane International Marine Inc., 2424 Haywood Avenue, West Vancouver, BC, Canada V7V 1Y1
(EU - 001) 604-925-2660 fax 604-925-2653 info@hydrovane.com www.hydrovane.com

INSTALLATION OF NEW UNIT

A. CONSIDERATIONS AND PREPARATIONS BEFORE YOU START

- TIPS/WARNINGS – Please review this section on our website.
- INSTALLATION 'IN THE WATER' OR 'ON THE HARD'? – We have seen some problematic installations that were done in a boatyard. Our preference is for the 'in the water' installation, primarily because it provides certainty as to where the waterline is. If done in the water, the installer needs reminding to keep lines on everything – the pieces are slippery, heavy, and valuable. Use strong tape and good knots.
- 'OVER ENGINEER' to make a ROCK SOLID INSTALLATION – The loads on the Hydrovane brackets will be enormous at critical times. The weakest link need not be the timber pads (spacers), backing plates, or bolts – but that is what happens with poor installations. Use materials that are good quality and plenty strong… and periodically re-tighten the bolts through the transom, especially after the first sail.

REQUIRED FOR INSTALLATION, BUT NOT PROVIDED WITH THE UNIT

The requirements of these items are unique from boat to boat, therefore, we do not supply with the unit:

- TIMBER PADS (SPACERS) – More info in the TIPS section of our website. Timber pads are not provided, unless ordered from us. Many customers will custom fabricate. Timber pads (or spacers) are pieces of teak or suitable synthetic that are very hard and shaped in order to pick up the contour differences between the transom and the flat inside faces of the flanges. The flanges must be perfectly flush with the contact surface, or the aluminum casting could fracture. Even if the fiberglass transom appears to be flat at that point it is wise to make a spacer to be sure the load is equally distributed. IT IS CRITICAL THAT THE BRACKETS CANNOT 'WORK' – THEY MUST BE ABSOLUTELY RIGID. Some Suggestions on pad material:
    - The timber pads we sell are made of Oroko Teak
    - HDPE (has lots of brand names) – cheapest, easiest to work with and light (it floats)
    - UHMWPE (has lots of brand names… Starboard) – pricier
    - Phenolic plastic or Tufnol – looks like wood, but very expensive
    - Delrin/Acetol
- BOLTS – Use metric M10 or non-metric 3/8" bolts (if you have a choice the metric M10 is the better of the two (a bit thicker), although we have no history of either breaking). The bolts must be marine grade – made of 316 or A4 stainless steel. If a particularly long bolt is required, but not available, one can be fashioned from threaded rod, using nyloc nuts on both ends and cutting off the excess. Such threaded rod is inferior to a proper bolt but considered adequate. It would be wise to file down both ends to remove any sharp burrs.

- BACKING PLATES – The bolt head or nut on the inside of the transom must have its load distributed. Any substantial marine material can be used as a backing plate. If metal, the 316 stainless is best. Aluminum plate is also used as well as any of the hard plastics, such as Delrin, that are listed above for the spacer pads. Marine plywood is another suitable material. Depending on the thickness of the hull, a 1/8" (3mm) stainless steel plate or 3/4" (2cm) plywood or synthetic is normally suitable. At the minimum a buildup of fender washers

is necessary. A single washer is not enough support – especially on modern lighter weight boats built to minimum tolerances. The plate or washers must be flush with the bolt head or nut. Any cavities behind the backing plate should be filled with fiberglass or epoxy resin. If there are obstructions for the bolts and the plates on the inside of the hull, two separate ones can be used. The bolts are 7" (17.8cm) apart.

- NO TRANSOM FLEX – If there is any flex or potential for flex under load, the likelihood for failure is very high, especially in the worst of conditions. There must not be any possible flex in the structure. Beef up the section of the transom with more fiberglass or use large, single piece, heavy gauge metal backing plates.

NOT REQUIRED, BUT WILL MAKE THE INSTALLATION EASIER

- 2" OD PVC PIPES – To be used as dummies for the shaft and bracket struts. Both are sized as 'imperial' (non-metric) 2" (precisely 50.8mm) Outside Diameter (OD). In North America there is a common 2" OD white plastic tube that is cheap and readily available (for central vacuum systems) and there is a European equivalent – 50mm pipe. Use the plastic tubes as lightweight dummies for positioning and determining strut lengths. The actual shaft is heavy to be playing around with.

WHEN YOU RECIEVE YOUR HYDROVANE

- A new Hydrovane is shipped in 4 or 5 boxes, each segment fully assembled:

    1. Drive Unit and H Bracket. Also included, but under separate panels – Tiller/Fork Arm Assembly and Lead Counter Weights. Be sure not to throw these out with the box!
    2. Rudder and Standard Vane Assembly
    3. Shaft Assembly
    4. Secondary bracket (A, E, or H)
    5. Stubby Vane Assembly (if required)

- When you receive the boxes, check to ensure no damage from shipping. If there are any signs of damage, notify us immediately (UPS, our preferred shipper, will only process claims within 10 days of delivery).

- Check that the Shaft spins freely. Bearings can be knocked loose or the bottom collar pressed against the bottom bearing. Holding the shaft assembly in the air by the outer tube, spin the shaft inside. It should rotate freely. Once the shaft assembly is installed, you will do this test again to ensure the shaft is not binding. Check that the plastic black delrin (top) and white PTFE (bottom) bearings are flush with the stainless tube. As well, check that the bottom collar (stainless) is not touching the bottom bearing (white).

- Take note of the shaft sleeves (grey plastic) that are included with both brackets, where the shaft slides in. These are common to loose overboard during the installation so we recommend taping them to the bracket. The sleeves are machined to specific widths and are not interchangeable. Incorrect sleeves will result in cracked castings.

PLANNING THE INSTALLATION

- John and Will Curry will work with you to determine the correct shaft length and bracket configuration for your boat. You will probably have a good idea on where and how you want to mount the unit.

- FLEXIBILITY IN PLACEMENT – Since the brackets do not require critical positioning, you may move the placement higher or lower subject to the little surprises found on the inside of the transom and the following maximums and minimums.

- SHAFT VERTICAL – The object is to install the shaft in a vertical position, somewhere on the transom. To establish what is vertical, start with a measuring tape on the transom's mid point at the top to the point at the bottom (if there is one). For eyeballing, compare to the mast (or better yet, the keel, if on the hard).

- BOTTOM OF THE SHAFT SITS ABOVE THE WATER – Aside from 'off center' and 'distance from the main rudder' discussions with Will or John, the shaft is intended to sit with its bottom stub 1" (2.5 cm) above the water… for the practical reason: to avoid growth. That position is very suitable for normal operation. If, for other reasons, it is desirable to lower or raise the shaft, that is fine – subject to the obvious considerations.

- UPPER BRACKET – Preferably the upper bracket is close to the drive unit. The higher, the better, but leave at least 7" (18 cm) of shaft and stub for the drive unit to attach to. The upper bracket should be, preferably, no lower than 18in (46 cm) from the drive unit. This maximum has been stretched without consequences, but the concern is the amount of unsupported weight and structure.

- LOWER BRACKET – Essentially the shaft is vertical and the two brackets are holders with the bottom bracket gripping the shaft at somewhere between 10 in (25 cm) and 20 in (50 cm) above the waterline. Ideally the bottom bracket is as low as possible but not too close to the bottom bearing as it will cause binding – prefer a minimum of 2" (5 cm) of stainless visible below the clamp. If need be, the bracket can clamp on a bit lower down of the shaft. The danger is in crimping the bottom bearing.

***

B. FITTING THE BRACKETS AND SHAFT

Always install the H (Hinged) bracket FIRST! Your secondary bracket will be another H, an E, or an A.

First Bracket: HINGED 'H' BRACKET

H Bracket lower position with plastic (Delrin/Acetal) Pad

1. Mark out the centerline of the transom or a line parallel to the centerline for off-center mounting.

2. Put the H bracket on the transom and use a dummy PVC tube to find correct positioning where the shaft will be vertical side to side (fore and aft is not an issue at this point – the H bracket is hinged).
   - Traditional: if the transom is vertical or slopes forward from the deck, the bracket is fitted close to the deck line or on the deck.
   - Reverse and sugar scoop/platform: if the transom slopes aft from the deck, the H bracket is fitted as low as possible on the transom or on the counter underneath, but within the limits shown.

3. DRILL HOLES **-** Use the bracket flange as a template to mark the position of the two 3/8" (10 mm) clearance holes for the mounting bolts.

4. TIMBER PAD - If required, have ready a timber pad for between the bracket and the hull. See 'Timber Pad' above.

5. BACKING PLATE - Ensure use of a backing plate. See 'Backing Plate' above.

6. BOLT FLANGE TO TRANSOM - Bolt the H bracket securely on its timber pad to the hull using a sealing compound and 3/8" (10 mm) diameter stainless steel bolts.

7. CHECK POSITIONING - Before tightening the hull bolts fit the shaft assembly into the bracket with bolts (A) and (B) tightened only sufficiently to hold the shaft vertical to ensure the correct location of the bracket flange. Also be sure to check positioning of the grey shaft sleeve between the casting and the shaft tube.

8. SHAFT CLAMP BOLTS - You may choose to fit the real shaft at this point. Or, you may continue to use a PVC dummy shaft for positioning the secondary bracket. Whenever you are ready to install the shaft, be sure to follow the BOLT TIGHTENING SEQUENCE:

   - If you want, insert the SHAFT LOCKING PIN in the top hole and the fit the rudder (held in place with the RUDDER LOCKING PIN) to help check that the shaft is lined up vertically.

   - Support the unit so that bolt B may be slackened off and the forward bolt A tightened hard. Finally, tighten bolt B hard.

9. When the H bracket installation is complete, recheck the tightness of all bolts.

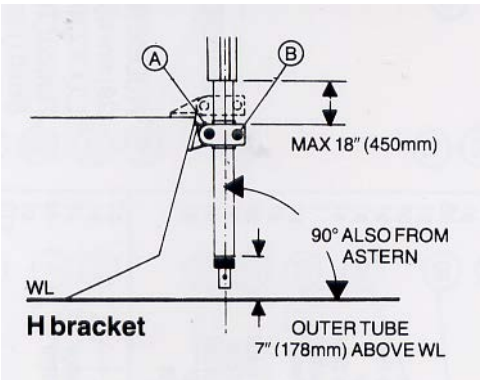

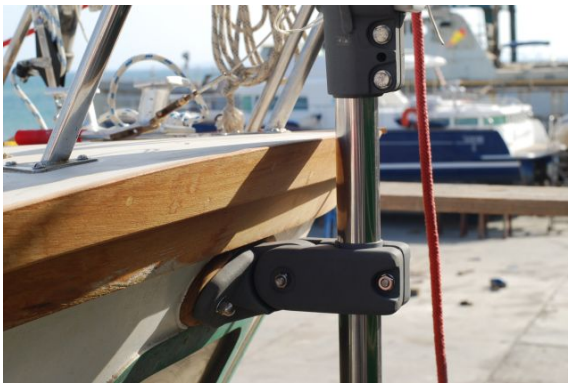

Bolt Tightening Sequence: 1st A – then B

Second Bracket: HINGED 'H' BRACKET

On H/H installations the second H bracket is fitted as detailed above to give maximum bracket spacing within the limits shown. If the transom is raked, the second H bracket will require a thicker pad to keep the shaft vertical. When the installation is complete, RECHECK THE TIGHTNESS OF ALL BOLTS.

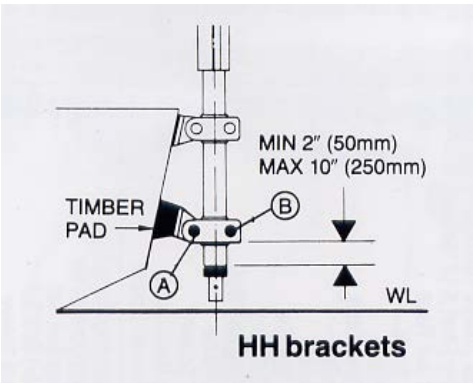

Bolt Tightening Sequence: 1st A - then B

SECOND BRACKET: SINGLE STRUT 'E' BRACKET

E bracket in lower position

E bracket in upper position

GETTING READY – The E bracket is a bit harder to deal with:

- It is the only bracket without a hinge, meaning the angles are fixed and MUST be accommodated by using a timber pad to accommodate the contour of the hull and the difference in angles.
- FIXED ANGLES – Each of the castings at either end of the Strut (Stay Tube) hold the tube at an angle of 15 degrees. The result, depending on the direction the castings are positioned, it to create aggregate angles of either 30 (15 + 15) or zero (15 – 15) degrees

Warning: The bracket must be well aligned. Misaligning the castings and struts cannot be solved by cranking into place when bolting together. The bracket must fit perfectly before bolt tightening. If bolted in place in other than its natural position (ie, forced into place) then there will be constant stress on the casting(s) which inevitably ends in a 'stress fracture' – a broken casting. The aluminum metal used can tolerate considerable flex for short periods and withstand enormous working loads BUT it cannot handle constant stress.

1. FLANGE FLAT ON TRANSOM - Start with the flange as close to flush with the transom as possible. As shown above, there is almost always a difference in angle to accommodate. Ideally the bolts will be perpendicular to the transom (means the bolt heads on the inside will sit naturally flush to the backing plate). This is rarely the case so the timber pad is very important. Similarly, as previously discussed, fiberglass or epoxy resin must fill the gap between the backing plate and the hull. The result must be that the backing plate sits flush, not cock-eyed, to the bolt head or nut. If the backing plate puts uneven pressure on the bolt head or nut, the risk is that the bolt could bend and break at that point.
2. DRILL HOLES - Use the bracket flange as a template to mark the position of the two 3/8" (10 mm) clearance holes for the mounting bolts.
3. TIMBER PAD - Have a timber pad ready to fit between the bracket and the hull. See 'Timber Pad' above.
4. BACKING PLATE - Ensure use of a backing plate. See 'Backing Plate' above.
5. ESTIMATE TUBE LENGTH
   - Establish distance 'L' from the transom to the shaft. The strut length: L less 2" (5cm), less an allowance for the thickness of a timber pad. To make it easier, you can use the same PVC tube, cut the estimated length of the strut and test it.
   - The stainless struts are provided at a length of 18" (46cm). Once appropriate length for your installation is

determined, cut stainless tube with fine toothed hacksaw.

6. BOLT FLANGE TO TRANSOM – Bolt the E bracket flange on its timber pad securely to the hull with the backing plate inside.

7. ASSEMBLE THE END FITTINGS ONTO THE STRUT (STAY TUBE) AND BOLT

   - SHAFT CLAMP: Assemble the shaft clamp around the strut and the shaft tube. As this point, you will be using the real tube. Ensure that the plastic shaft sleeve is in place (best if taped to the clamp). Tighten the bolts only sufficiently to hold the shaft clamp in its planned position. The stay tube should be touching the plastic sleeve.

   - TRANSOM CLAMP: Assemble the transom clamp around the strut with the strut fully into the clamp.

   - TIGHTEN BOLTS ACCORDING TO BOLT TIGHTENING SEQUENCE: The most common mistake, typically made by skilled tradesmen that do not look at these instructions, is to NOT properly tighten the bolts that clamp the castings on the tube. All 4 (2 on each) A bolts must be tightened first. Check that the tightening is even – the gaps in the castings are even. Only when all A bolts are tightened should the B bolt then be tightened.

8. When the E bracket installation is complete, recheck the tightness of all bolts.

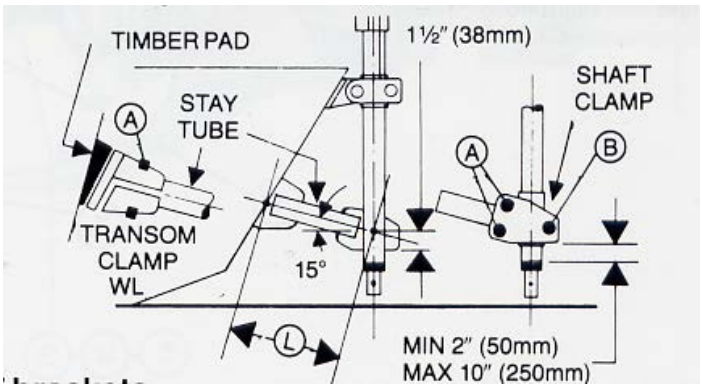

Bolt Tightening Sequence: all (A)s first - then the (B)

SECOND BRACKET: DOUBLE STRUT 'A' BRACKET

Our biggest, strongest and most versatile bracket. The 'A' Bracket solves most difficult installation issues:

- Its flexibility:
    - Arms swing up or down vertically
    - Arms open in or out from 40 degree to 80 degrees separation (new in summer 2013)
    - Transom attachment flanges fully rotate to become flush with any surface.
    - Struts/tubes can be cut to any length
- Strength - Engineers love triangles

Warning: The bracket must be well aligned. Misaligning the castings and struts cannot be solved by cranking into place when bolting together. The bracket must fit perfectly before bolt tightening. If bolted in place in other than its natural position (ie, forced into place) then there will be constant stress on the casting(s) which inevitably ends in a 'stress fracture' – a broken casting. The aluminum metal used can tolerate considerable flex for short periods and withstand enormous working loads BUT it cannot handle constant stress.

1. Fix the real or dummy shaft tube into the H Bracket – so shaft is in place.

2. Slide the A Shaft Clamp casting onto the shaft tube

   If necessary, use the 'Opener' - If the shaft clamp does not slide easily onto the rudder tube, remove bolt (C) and screw it into the adjacent, threaded hole – see more discussion about the OPENER in the section on Assembly of the Drive Unit (pg. 9). Note there are total of 5 of such 'Opener' holes on the 'A' Bracket - each to open the casting to get it onto the Shaft tube or Strut tubes.

3. Determine position

   - FAR FROM THE 'H' - Try to maximize the distance from the 'H' bracket ... but:
       - CLEAR OF BOTTOM BEARING - If it is the bottom bracket - keep clear of the bottom bearing - recommend 2 in./5 cm. of stainless showing above the bottom
       - LEAVE ROOM FOR DRIVE UNIT - If it is the top bracket - leave 7 inches (18 cm.) of shaft for the Drive Unit to sit on.
       - FOR VERY LONG SHAFTS - If the drive unit is particularly high - means the shaft is an X+? - the bracket should be within 25 inches (65 cm.) of the top - but preferably closer.

4. TIGHTEN ONTO SHAFT - Tighten bolt (C) lightly to hold it temporarily in place.

5. ESTMATE TUBE LENGTHS – Estimate the required length of the struts. As with the E bracket, it is easy to experiment with the PVC tubes.

   Note that each of the 4 castings that fit onto the tubes has a threaded hole for use as an 'Opener' - see explanation above.

6. CUT TUBE LENGTH - Cut stainless steel tubes to the estimated length using a fine-toothed hacksaw and assemble the complete bracket by bolting it lightly together.

7. POSITION ARMS - Swing the two arms up and rotate the mounting flanges to lay flush with the hull.

8. DRILL HOLES - Using the flanges as templates, drill the 3/8 in. (10mm) clearance holes through the hull.

9. TIMBER PAD - If required, have ready timbers pad for between the flanges and hull. See 'Timber Pad' above.

10. BACKING PLATE - Ensure use of backing plates. See 'Backing Plate' above.

11. CHECK ALIGNMENT - Check the overall alignment and location of the bracket and the overall position of the unit.

12. ASSEMBLE THE END FITTINGS ONTO THE STRUT (STAY TUBE) AND BOLT

    - SHAFT CLAMP: Assemble the shaft clamp around the strut and the shaft tube. As this point, you will be using the real shaft. Ensure that the plastic shaft sleeve is in place (best if taped to the clamp). Tighten the bolts only sufficiently to hold the shaft clamp in its planned position. The stay tube should be touching the plastic sleeve.

- TRANSOM CLAMP: Assemble the transom clamp around the strut with the strut fully into the clamp.

TIGHTEN BOLTS ACCORDING TO BOLT TIGHTENING SEQUENCE: The most common mistake, typically made by skilled tradesmen that do not look at these instructions, is to NOT properly tighten the bolts that clamp the castings on the tube. All 4 (2 on each) A bolts must be tightened first. Check that the tightening is even – the gaps in the castings are even. Only when all A bolts are tightened should the B bolt then be tightened.

13. BOLT FLANGE TO TRANSOM – Bolt the A bracket flanges on their timber pads (if required) securely to the hull with the backing plate inside.

14. When the A bracket installation is complete, recheck the tightness of all bolts.

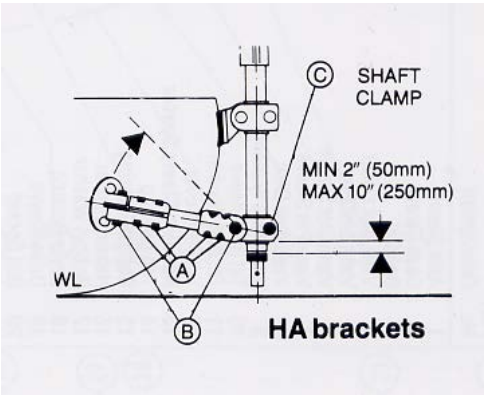

Bolt Tightening Sequence: 1st A - then B - then C

After both brackets are installed, and prior to final bolt tightening on the real shaft, insert the SHAFT LOCKING PIN in the top hole and the fit the rudder (held in place with the RUDDER LOCKING PIN) to check that it lies fore and aft.

***

C. ATTACHING THE DRIVE UNIT

READY DRIVE UNIT

1. Bolt on the counterweights.
2. Remove the white plastic housing (Frame Case) from the Drive Unit to avoid damage.
3. Insert the VANE LOCKING pin - to keep the top section rigid.
4. Remove the SHAFT LOCKING pin from its sleeve in the Drive Unit frame.
5. Move the RATIO KNOB to the far left so that the plastic-sleeved Drive Arm points to the far right - at the 4 o'clock direction (approximately).

INSTALL RUDDER

1. If you haven't already done so, install the Rudder onto the shaft - held in place with its Locking Pin

FIT DRIVE UNIT ONTO SHAFT

1. Test to see if the bore hole of the Main Frame fits onto the shaft - do not force it - it might or might not fit without using the 'Opener'.
2. **OPENER** – Find the 2 bolts at the base of the Drive Unit that clamp it onto the shaft. Check that those bolts are loose. Note the empty middle hole…

that is the Opener.

3. If the Opener is needed, remove one of those 2 bolts. Screw it into the middle opener hole until it is hard against the far wall, then tighten this bolt only one quarter of a turn at a time until the Drive Unit frame will slide easily into the shaft assembly. WARNING: Be very careful not to tighten excessively – the casting could crack or break.
4. Hold the Drive Unit in a bear hug and slide it onto the Shaft.
5. If the Drive Unit collar does not slide easily onto the Shaft Assembly, do not attempt to force it in but give the OPENER bolt another quarter turn - keep doing so - until it fits.

FIT TILLER ONTO THE SHAFT & FORK HOLDING THE RATIO ROD

1. The stub of the shaft emerges from the frame collar (bore hole) into the open space. Lift the Drive Unit slightly in order to complete #2.
2. Slide the TILLER casting into the frame with two stainless rods (Drive Rods) holding the plastic-sleeved Ratio Rod.
3. The bronze Fork Arm will fit onto the top of the shaft.

POSITIONING

At this stage an extra pair of hands are helpful, but can be done solo, to achieve:

1. RUDDER @ 180 DEGREES - It is helpful to have someone hold the rudder in the dead aft position - to insure the Shaft Pin hole is at the 180 degree fore and aft direction - helps in locating the Shaft Pin Hole.
2. SHAFT LOCKING PIN SHOULD FIT FREELY - The shaft is in the right position when the Shaft Locking Pin can move freely into its sleeve on the front of the Drive Unit and passing through the hole in the plastic collar at the top of the Shaft Assembly.
3. TIGHTEN DRIVE UNIT SHAFT BOLTS - Loosen the 'opener', if used, and tighten the Shaft Bolts to secure the drive unit on ... hard. Of course, if the 'opener' was used then that bolt with its washers will be re-installed in its bolt hole and tightened hard.

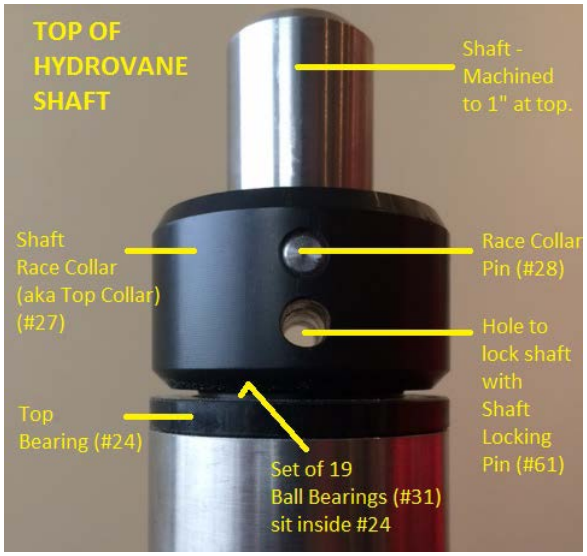

LEFT - Shaft Lock Pin Hole beneath Tiller & Fork Arm assembly. The bronze casting fits on the top of the shaft.
RIGHT - Top of Shaft and related parts. The shaft assembly comes fully assembled.

TO SET #58 FORK BOLT – Locks Fork Arm onto the top of the shaft

1. Shaft Locking Pin #61 inserted
2. Vane Locking Pin #60 inserted
3. Ratio Control Knob #21 to the far left - means the Ratio Rod #35 points between the 2 Drive Rods #36 at a 4 o'clock direction. This is best shown in our videos.
4. Line up the Tiller #23 so that the Ratio Rod #35 sits evenly between the 2 Drive Rods #36 without touching either one. Feel with a finger that the Drive Sleeve #19 on the Ratio Rod #35 can spin freely.
5. Perhaps helpful to put some thick paper (eg - business cards) on either side of the Drive Sleeve to hold the space.
6. Tighten #58 Fork Bolt ... hard ... very hard – That's why it's made of bronze
7. Remove paper spacers, if any.

TESTS (See also FINAL INSPECTION TESTS)

1. DRIVE SLEEVE TEST - DRIVE SLEEVE MUST SPIN FREELY (This is the most important test)
2. SPIN the #19 Drive Sleeve – after removing the business card the Dive Sleeve should spin freely without touching either of the #36 Drive Rods. If not the case, see FINAL INSPECTION TESTS.
3. Pull out the Ratio Knob and swing it back and forth to see that it moves freely without touching either of the #36 Drive Rods.
4. RUDDER CENTERED – Remove the Shaft Locking Pin and swing the tiller back and forth to see that its angle from side to side is symmetrical and smooth.

***

D. REMOTE COURSE SETTING

The remote course setting line allows you to adjust the angle of the vane to the wind without leaving the cockpit. It's meant to be set up somewhere handy to the cockpit. It can be as long as you like – any route – and friction is not a problem.

- The remote course setting line should be led through the fairleads and around the grooved track as shown.
- The line should be led to a position that is convenient – along the lifelines or into the cockpit.
- Double blocks can then be used to lead the lines forward around any obstruction.
- The final anchoring for the line is made using the block and bungee cord provided.
- It's like a clothesline – make an endless loop with the line provided. See HEAT WELD below.

HOW TO DO A HEAT WELD ON THE LINE

1. The line must be new (no contact with salt water). Make sure both ends are clean and not frayed.
2. Perhaps cut off a small section to experiment with first?
3. Holding both ends to a flame (actually, above the flame so that the material can heat up slowly – do not want it bursting into flames – just slowly melting), make both ends hot enough that they are gooey. It helps to have two sets of hands for this step.

4. Once gooey, quickly mash the ends together and pat down any hump (helps to wet one's fingers for that 'patting down').
5. You're done. Within maybe 30 seconds you can snap it or try to break the weld with all your strength – the weld is tougher than the line. The weld will look like a section of solid plastic.

***

E. FITTING THE VANE COVER

1. Spray liberally with Silicone Spray – Do not worry about messing up the vane cover… it all dries up and disappears. Spray the inside of the vane cover, covering the entire perimeter (the part that will touch the aluminum frame). Also spray the outside of the frame. Be quick, it soon dries up.
2. Pull it on like panty hose – Slide the cover on the frame, smoothing down the leading and trailing edges and insuring that the seams are exactly placed over the tubes. It takes a lot of yanking and pulling. You can squeeze the side of the tube frame inward. It helps a bit.
3. Lacing – Start near the casting. Push the laces through the eyelets from the inside outwards, diagonally hole to hole until the end of the lace is reached. Tie a knot across the bottom of the tube at this stage. There will 2 or 3 pairs of holes still not laced.
4. Sweat the laces – No it is not too short! At this stage the cover will seem to be 3 or even 6 inches (15 cm) too short. This is not so. Once a portion of the lacing is threaded, use the line to cinch down the cover. Sweat it like old style corsets. The material is stretchy – will not rip.
   TIP: Use cable ties (also known as a hose tie, zap-strap, zip tie) to help cinch and then cut away when done.

***

F. FINAL INSPECTION TESTS

For part names and numbers it is best to refer to the PARTS webpage. These tests are easily explained in our videos.

DRIVE SLEEVE TEST – DRIVE SLEEVE MUST SPIN FREELY

This is the most important test! Must do!

1. Shaft Locking Pin #61 inserted
2. Vane Locking Pin #60 inserted
3. Ratio Control Knob #21 to the far left (means the Ratio Rod #35 points between the Drive Rods #36 at a 4 o'clock direction)
4. Check that the Drive Sleeve #19 spins freely and does not bind on either of the Drive Rods #36.
5. TEST: Swing the Ration Control Knob #21 back and forth causing the Ratio Rod #35 to move between the vertical (6 o'clock) and 4 o'clock positions. It should swing freely without touching either of the two Drive Rods #36.

Finger is on the Drive Sleeve, which should spin freely on the Ratio Rod and which sits between the 2 Drive Rods
The Tiller and 2 Drive Rods are all part of the Fork Arm assembly

RE-SETTTING THE FORK ARM ASSEMBLY ONTO SHAFT (IF THE DRIVE SLEEVE IS BINDING)

1. Shaft Lock Pin #61 Inserted
2. Vane Lock Pin #60 Inserted
3. Ratio Control Knob #21 to the far left (means the Ratio Rod #35 points between the Drive Rods #36 at a 4 o'clock direction)
4. Loosen the bolt that holds the bronze Fork Arm and Tiller assembly onto the top of the shaft.
5. See the Drive Sleeve #19 in the picture? It is the dark grey plastic that spins on the Ratio Rod (which sticks downward). Get a business card or equivalent paper or cloth. Cut a small piece that can wrap around the Drive sleeve and fit between the Forks (Drive Rods).
6. Now tighten that same bolt #58 that holds the Fork Arm and Tiller assembly onto the top of the shaft. Tighten it HARD.
7. Remove the paper or cloth.
8. Feel that the plastic Drive Sleeve spins freely.
9. Pull out the Ratio Knob and move it back and forth…. can you easily spin the Drive Sleeve now? If it still touches one of the Drive Rods, you should do the whole exercise again. If it continues to touch, contact John.

DRIVE UNIT ON SQUARE?

The tiller must be on a true 180 degree setting, parallel to the centerline of the boat. If it is off, it is like trying to walk while you are leaning 5 degrees to starboard.

Try to eyeball it:

1. Shaft Locking Pin #61 inserted
2. Vane Locking Pin #60 Inserted
3. Extend Tiller – if you can, try sticking a 3/4" (12 mm) dowel or rod into the hole in the tiller. A tube over it works as well – 1.5" (38 mm). The purpose is to make it visually more obvious if the tiller is on a true 180 degree setting.

TILLER FLIPPING TEST

1. Set Ratio Control Knob in 'neutral' or far right position
2. Flip the Tiller back and forth

The tiller must freely move freely from side to side with only the slightest push. If it stops before going fully over, the problem can be either:

1. Bottom collar #26 is binding on Bottom bearing #25. There must be a hair of space between the two. Use a

credit card to space apart.

2. Lower bracket is too close to the Bottom bearing. We suggest at least 2" (5 cm) of stainless shaft tube showing above the white or black lip of the bearing.

AXLES FIRMLY HOLDING THE VANE LEVER & BOTTOM LEVER (not expected in new units) – There are a total of 8 Axles that allow all the movement in the mechanism. The #69 Bottom Lever has a total of 4 Axles: on each side and also fore and aft. The Bottom Lever should comfortably rock up and down on its Axles but should have no lateral movement sideways or fore and aft – should be firmly held by those Axles. That is the TEST. If there is any lateral movement the loose Axle should be re-set. It will be self-evident if any of those 4 Axles are loose as the end that sticks out should look the same for each. For the upper Vane Lever the Axles are more evident – 2 side by side on each side. Unfortunately the 2 holding the #3 Bobbin stick out more than the others and do not look even. The test is that the Bobbin cannot slide laterally – can only rock up and down. If resetting required, see the TIPS webpage.

WINDVANE & BALANCE WEIGHT HAVE FREE AIRSPACE

1. Balance Weights are bolted on
2. The vane is clamped in place
3. Using the Remote Course Setting Line - Rotate the vane through the full 360 degrees. At any point where the vane or weights are near potential obstructions fully deflect and incline the vane to see if the vane or weights touch anything.

***

G. SAFETY

- RE-CHECK BOLTS – Check that all the bracket and hull bolts are tight after first using the unit! Check at intervals afterward.
- TETHER THE RUDDER – Use a length of line, not less than 3/8" (10 mm) diameter, tied through the rudder handle and secured loosely to some point on the stern, to ensure that the rudder is not accidentally lost. THE RUDDER DOES NOT FLOAT.
- TETHER THE LOCKING PINS – All 3 Locking pins have tethers.
- ROTATE RUDDER LOCKING PINS – The Locking pins are interchangeable. The Rudder pin does suffer from metal fatigue over time. Best to periodically change it with spares or rotate it with the other locking pins.

***

H. MAINTENANCE

SOAP AND WATER AND WD40 - In addition to regular washing with fresh water, at least once a year the whole of the unit, including castings, should be cleaned with fresh water and detergent. When dry, the unit, again including castings, should be thoroughly sprayed with a light aerosol oil such as WD40.

SPRAY CASTINGS WITH CORROSION INHIBITOR – The gray metal aluminum casting could use periodic spraying with a corrosion inhibitor, especially the brackets as they are closer to the water

- Lanocote – www.forespar.com – used on all bore hole during assembly
- CorrosionX - www.corrosionx.com
- T-9 – www.boeshield.com
- LPS3 – www.lpslabs.com … many more, use your favorite.

DO NOT GREASE ANYTHING! EVERY JOINT SHOULD RATTLE – If any of the axels, shafts, or bearings are removed for cleaning or adjustment (although no reason to do such), the unit should be reassembled so that there is a slight but noticeable end play between the moving parts. The Hydrovane is designed to 'rattle' – so, do not re-set those joints to remove the 'rattle' or 'looseness'. The purpose of the loose joint is twofold:

- There must be room for a delay in the transition from a course change in one direction to a course change in the opposite direction. Otherwise, the system would be 'on' all the time – another type of 'over steering'.
- The joints need space to accommodate salt and dirt build-up. Otherwise a tight system soon becomes too tight causing unnecessary friction.

OPERATION

A. UNDER SAIL

UNDER SAIL - USING HYDROVANE

1. **Two pins out** - Remove the VANE LOCKING pin and the SHAFT LOCKING pin. The rudder will be free trailing.
2. **Hold Course** - Sail the yacht onto the desired course.
3. **Trim the sails for good balance** - feel minimal loads on the wheel/tiller
4. **Put the vane 'In Irons'** - Pull one or other of the COURSE SETTING LINES to turn the vane until it is approximately in line with the wind direction (balance weight pointing into wind). On the VXA1 model, slacken the COURSE CLAMP knob, turn the vane round using the knob and tighten it in the position required.
5. **Lock/secure the wheel or tiller in that position that holds the best course – typically not on center line.** It is important that the wheel or tiller is rigid - cannot move.
6. **Engage the Hydrovane** - Pull out the RATIO KNOB and move it to the 2nd position (to start). Ratio settings are Neutral, 1st gear, 2nd gear, and 3rd gear from right to left. See more below about gearing.
7. **That's it! Enjoy**!

UNDER SAIL - HYDROVANE NOT IN USE

1. VANE LOCKING PIN inserted to hold vane vertical
2. RATIO KNOB in neutral (far right) position.
3. SHAFT LOCKING PIN removed to leave rudder free.

***

B. MOTORING AND GOING ASTERN

MOTORING

1. VANE LOCKING pin should be inserted to hold vane vertical. Better yet, remove the vane and store below when not using it.
2. RATIO KNOB in neutral position (plastic-sleeved drive arm vertical).
3. SHAFT LOCKING PIN (below the Tiller) inserted to fix rudder central.

4. On some yachts the water flow from the propeller (prop wash) may create bias on the helm. It is preferable to remove the auxiliary rudder if motoring for long periods, particularly at higher speeds – although not really an option when at sea motoring through a calm waiting for wind. Re-installing the rudder at sea in the best of conditions is challenging for those that have a swim platform – largely impossible otherwise. When coming into port, remove it if you can (have a good tether on it, and pull the RUDDER LOCKING pin). Best option if you cannot remove the rudder is to insert the SHAFT LOCKING pin so that the rudder is locked fore and aft.
5. VIBRATION: Some engines cause considerable vibration which when transferred to the shaft and rudder produces quite a chatter of the rudder. The solution is to break the harmonic chatter by cinching up the rudder with considerable force. A heavy duty rubber snubber is the answer – same as is used on dock lines. Take the line with the snubber from the Hydrovane handle onto a cleat – heave hard before tying off. Better yet, remove the rudder and store when not using.

***

C. VARIABLE RATIO CONTROL AND ADJUSTABLE VANE AXIS ANGLE

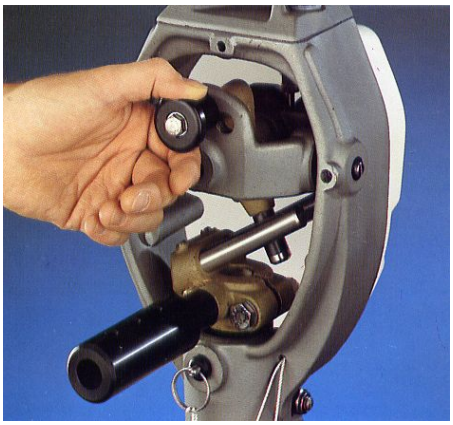

Variable Ratio Control Knob for Adjusting Vane Axis

The variable ratio control and adjustable vane axis combine to give the Hydrovane the capacity to respond accurately in a wide range of wind and sea conditions. Test them out and play around a bit.

ADJUSTING VANE AXIS – normally done in heavier conditions

1. Slacken the AXIS CLAMP knob, using the balance weight as a handle
2. Incline the axis to about its mid-position.
3. Tighten the AXIS CLAMP
4. Observe the performance of the unit:

    - If the yacht is moved repeatedly through the correct heading, the vane is still too sensitive and the vane axis should be inclined farther.
    - If the yacht returns too slowly to the correct heading, increase sensitivity by moving the vane axis nearer horizontal (vane vertical).
    - If necessary, **combine these adjustments with alterations in the position of the RATIO KNOB to obtain optimum performance.**

5. In general, the vane will be vertical or nearly so when sailing close hauled, and inclined more as the apparent wind moves astern.

RATIO KNOB positions are:

N - NEUTRAL	FAR RIGHT Unit is disengaged	Rudder trails free
1 – 1st Gear	Least power - most rudder deflection - 40 degrees	1:1 - Heavy conditions
2 – 2nd Gear	Double power - less rudder deflection - 30 degrees	2:1 - Preferred
3 – 3rd Gear	FAR LEFT Treble power - least rudder deflection - 15 degrees	3:1 - Light airs - more power

On some yachts a single setting of both vane axis angle and ratio knob position may prove satisfactory under most conditions. On others different combinations of ratio and axis angle will greatly improve performance for different wind strengths and points of sailing.

www.hydrovane.com